Enhanced Surface Heat Removal Using a Porous Tungsten Heat Exchanger

S. Sharafat, M. Demetriou, N. Ghoniem
University of California Los Angeles
Los Angeles, CA 90095-1597

B. Williams
Ultramet Inc.
Pacoima, CA 91331

R. Nygren
Sandia National Lab.
Albuquerque, NM 87185-1129

ABSTRACT

A novel concept for drastically improving the surface heat load capability of helium-cooled tungsten-alloy tubes is being developed for plasma facing components. The concept utilizes ultra-low density (90% porosity) W-foam, which is chemical-vapor-deposited inside a W-tube. The W-foam enhances the effective heat transfer coefficient inside the tube by significantly increasing the conduction path from the wall to the coolant fluid. A mockup of the W-tube/W-foam system has been constructed for testing at the helium loop and electron beam facility at Sandia National Laboratory, Albuquerque, NM. In this work, we present the modeling of the enhanced heat load capability of such a porous tungsten heat exchanger. A finite element model (FEM) is constructed based on a 3-D solid model of the test section. The enhanced heat transfer coefficient was determined based on fundamental heat transfer principles through porous media. The porous tungsten heat exchanger tube exhibits a 3 to 5-fold improved surface heat load capability relative to a plain W-tube at temperatures above 1200°C.

1. INTRODUCTION

The APEX study [1] is currently exploring limits of first wall (FW) and blanket technologies for use in attractive commercial power plants. Improvements in the heat removal capability of fusion reactor plasma facing components were identified to be critical for the successful development of attractive fusion energy systems. Typical FW heat loads have been identified to be around 2 MW/m^2 and divertor surface heat loads can be as high as 15 MW/m^2. Tungsten alloys have been recognized as potential structural materials for high heat removal solid FW concepts. The choice of tungsten as a plasma facing material is based on the high operating temperature capabilities and the high atomic weight of tungsten. Higher operating temperatures improve thermal efficiencies of the power cycle and the higher atomic weight ensures lower sputtering yield by high-energy particles from the plasma.

There are constraints in the operating conditions for fusion power plants: (1) the power conversion efficiency requires that coolant flow rates are kept as low as possible with minimum pressure drop to minimize coolant-pumping power requirements and (2) the operating temperature window for W-alloys is limited to avoid void swelling. Although void swelling is not anticipated to be a lifetime-limiting issue in body-centered cubic (BCC) high temperature refractory alloys, a potential void swelling regime has been estimated to be 900-1200°C for tungsten alloys [2]. The minimum operating temperature to avoid severe radiation embrittlement is expected to be 800-1000°C [3]. Furthermore, chemical compatibility issues may cause further restriction in the operating temperature window of tungsten alloys. Given a narrow operating temperature window of a few 100 degrees, improvements in the thermal performance of W-alloy-based concepts may therefore be critical to attain high thermal performance.

Research on enhancing the heat transfer of plasma facing components has concentrated mostly on using dispersion-strengthened copper alloys using a variety of metallic porous materials. Youchison et al. used a porous metal wick with dispersion-strengthened copper alloys [4]. The test tube was helium-cooled with axial flow. It survived a maximum absorbed heat flux of 16 MW/m^2 and reached a surface temperature of 740°C. In a similar experiment, Rosenfeld et al. used a helium/copper porous metal heat exchanger design to demonstrate absorbed heat flux capabilities in excess of 15 MW/m^2 [5]. Using machined fins to enhance the heat transfer surface of a

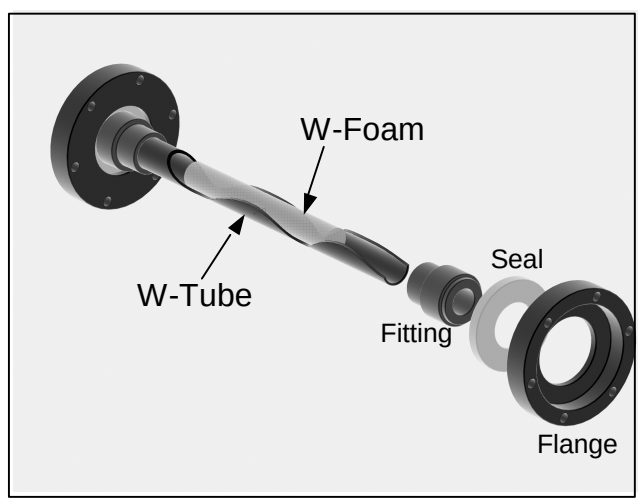

Figure 1: Exploded isometric cut-away view of the solid model of the W-foam heat exchanger test section.

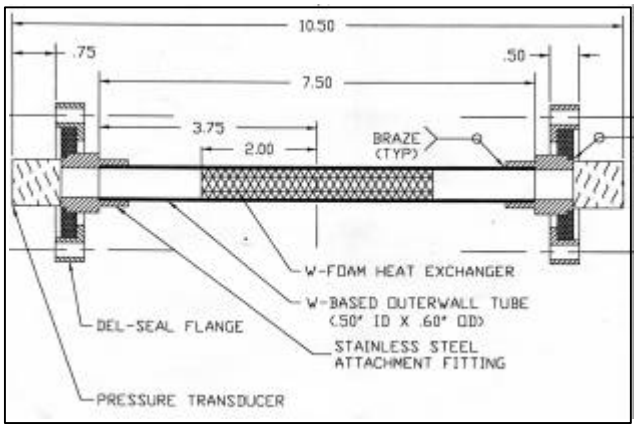

Figure 2: Cross sectional view of the W-tube/W-foam high heat flux test section (dimensions in inches).

copper alloy tube Baxi et al. investigated the pumping power associated with a 10 MW/m^2 heat flux [6]. The maximum wall temperature was measured to be 400°C and the pumping power was about 1% of the removed power. More recently, Ebara et al. used a sintered stainless steel sphere-packed bed with an average particle diameter of 500 μm to demonstrate a high heat flux removal capability of 10 MW/m^2 at very low water flow rate (0.04 m/s) and low pressure drop of 0.04 MPA [7,8].

The purpose of this work is to investigate the potential improvements in the surface heat load capabilities of W-alloys using porous structures and helium as a primary coolant. The concept considered here consists of a tungsten alloy tube with W-foam on the inside to improve heat conduction and heat transfer to the coolant. A FW test section representing this concept has been constructed for testing in the electron beam facility at Sandia National Laboratory (Fig. 1). An FEM model of the test section was constructed for analyzing the thermo-mechanical behavior. First, the increase in the effective heat transfer coefficient of such a structure had to be derived using models for fluid flows in porous structures. Results indicate a three to five fold improvement in the surface heat flux capability of a W-tube/W-foam system compared with bare W-tubes.

2. THE FINITE ELEMENT MODEL

Figure 2 shows a cross sectional view of the W-foam heat exchanger test section. For the high heat flux test a 28 kW E-beam would illuminate a length of about 3 inches on one side of the tube, resulting in an effective surface heat load of up to 15 MW/m^2. The inside of the W-tube will be helium cooled using flow rates between 10 and 50 liter/sec with a He-inlet temperature between 20 and 50°C. The test operating conditions are given in Table 1. Based on the test section, a 3-dimensional solid model was constructed for a thermo-mechanical FEM analysis. For the finite element meshed model, the ends of the test-tube were thickened to represent the additional structure of the flanges.

The 3-D model was meshed using solid tetragonal elements in order to be able to determine the temperature distribution through the wall thickness. The footprint of the E-beam on the W-tube was modeled by delineating a surface area that is representative of the E-beam illuminated region. The FEM input heat flux on this area was modeled using a cosine distribution to assure the drop-off in heat flux amplitude towards the outsides of the tube. To model a more realistic heating morphology along the edges of the heated surface, a thin perimeter around the heat flux footprint was modeled. This allows for modeling a peripheral heating rate along the edges of the heated area. It was assumed that the peripheral region receives about 10% of the maximum heating rate (Figure 3 shows the footprint of the heat flux area). To account for the W-foam covered section, the inside surface of the tube was divided into three regions: (1) an entrance region, (2) a W-foam covered region, and (3) an exit region. Each region was assigned a different heat transfer coefficients (*h*), with the W-foam covered section using an enhanced heat transfer coefficient (see Section 3). The FEM model consisted of more than 3000 elements. The ANSYS version 5.5.1 code was used to model the thermal response of the heated tube.

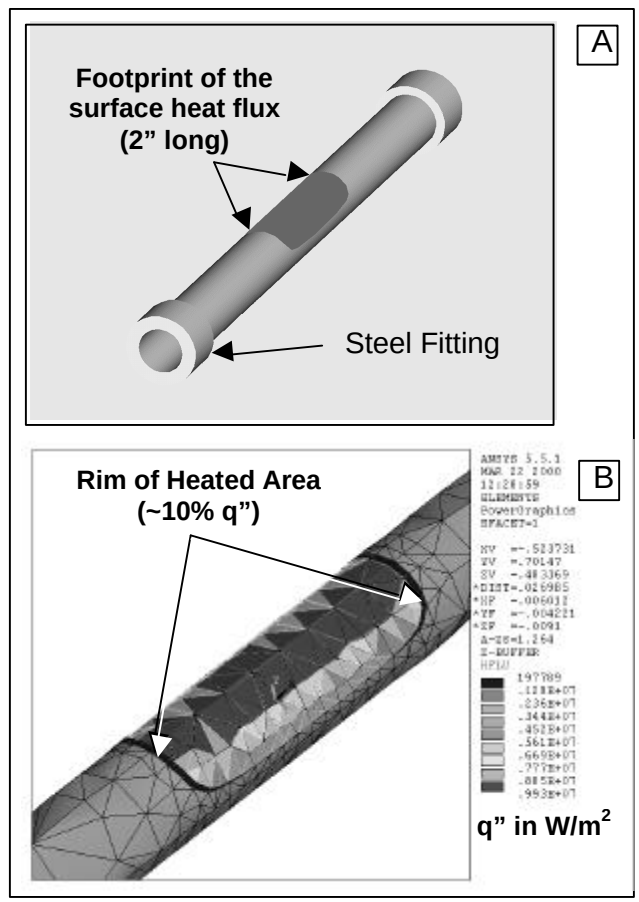

Figure 3: : Solid model of the test section (A) used in the FEM analysis and (B) details of the surface heat load distribution on the tube for the q''_{max}= 10 MW/m^2.

Table 1: Test Conditions and Parameters.

Helium flow rate	7 g/sec
Helium pressure	10 atm
Helium entrance temperature	30°C
E-Beam produced heat flux	1 – 15 MW/m^2
Duration of Heating	10 – 30 sec
Duration of E-beam heating	10 – 30 sec
Length of W-tube	19.05 cm
Length of Foam	10.16 cm
Inner Tube Diameter	1.27 cm
Tube Wall Thickness	.254 cm
Length of Heated Section	5.08 cm

3. CONVECTIVE HEAT TRANSFER MODEL

In this section, the forced convection correlations used to obtain the heat transfer coefficient along the tube sections with and without foam are outlined.

3.A Convective Model for "No-Foam" Tube

The Reynold's number along plain tube sections is estimated to be:

$$\mathrm{Re_D} = \frac{4\dot{m}}{pDm} = 34{,}000 \qquad (1)$$

which is well within the turbulent regime. The flow is considered hydrodynamically fully developed. For turbulent flow in circular tubes, the flow is considered thermally fully developed for *L/D* ratios greater than 10-15 [9]. The length (*L*) of the W-foam section is about 10.16 cm and the diameter (*D*) is 1.27 cm and thus the *L/D* ratio is about 8. Therefore, the flow is considered thermally developing, and the Nusselt number correlation accounting for thermal entrance effects is given by [9,10]:

$$\mathrm{Nu_D} = \frac{hD}{k} = \left(0.023\mathrm{Re_D^{4/5}Pr^{0.4}}\right)\left(1 + \frac{1.4}{L_h/D}\right) \qquad (2)$$

where *h* is the heat transfer coefficient, *k* is the gas thermal conductivity, L_h is the length of the heated section of the tube, Re_D is the Reynolds number based on tube diameter, and *Pr* is the Prandtl number.

3.B Convective Model for Foam Filled Tube

The flow in the porous medium can be treated as uniform slug flow at U_∞ [11]. The pressure drop across the foam is then obtained from Darcy's law:

$$-\frac{dP}{dx} = -\frac{P_{in} - P_{out}}{L} = m\frac{U_\infty}{K} \qquad (3)$$

where *P* is the pressure, *m* is the fluid viscosity, *L* is the full length of the foam, and *K* is the foam permeability, given by [11]:

$$K = \frac{D_f^2\, F^3}{180\left(1 - F\right)^2} \qquad (4)$$

where D_f is the fiber diameter and *F* is the porosity. The conservation of mass states:

$$\dot{m} = rVA = const. \qquad (5)$$

where $r = P/RT$ based on the ideal gas law, and *A* is the flow area. At the inlet, the pressure and temperature, P_{in} and T_{in}, are known. At the foam outlet, the exit temperature (T_{out}) can be estimated from the steady-flow energy equation along the tube:

$$\dot{m}c_p\frac{dT}{dx} = \int_0^{p/2} q''\sin q\, D\, dq \qquad (6)$$

where *x* and *q* are the axial and angular tube coordinates respectively, q'' is the surface heat load, and c_p is the fluid specific heat. Assuming uniform heat flux along the heated length, Eq. (6) yields the outlet temperature as follows:

$$T_{out} = T_{in} + \frac{q''DL_h}{\dot{m}c_p} \qquad (7)$$

The fluid exit velocity V_{out}, which is assumed to be the velocity inside the foam, U_∞, and the fluid exit pressure, must both satisfy Darcy's law and conservation of mass [Eqs. (3) and (5)]. They are given by:

$$V_{out}(L) = U_\infty = \frac{P_{in} \pm \sqrt{P_{in}^2 - 4\left(L/K\right)\left(\dot{m}RT_{out}/A\right)}}{2\left(L/K\right)} \qquad (8)$$

$$P_{out}(L) = \frac{\dot{m}RT_{out}}{V_{out}A} \qquad (9)$$

In modeling the heat transfer from the tube walls, the correlation for the average Nusselt number for developing porous flow over a plane wall is used. This correlation is based on an average wall temperature $\overline{T}_w$ and average bulk fluid temperature $\overline{T}_b$, and is a simplification, as a more detailed approach would use local values instead. Also, it would have been more appropriate to use the correlation for flow in a circular tube but the one accounting for entrance effects was not readily available. The overall Nusselt number is then [10]:

$$\overline{\mathrm{Nu}}_\mathrm{L} = \frac{\overline{h}L_h}{k_m} = \frac{q''}{\overline{T}_w - \overline{T}_b}\frac{L}{k_m} = 1.329\mathrm{Pe_L^{1/2}} \qquad (10)$$

where $\mathrm{Pe_L} = U_\infty L_h c_p/k_m$ is the Peclet number and k_m is the effective thermal conductivity of the foam. The effective conductivity of the foam is usually estimated by using the rule of mixtures:

$$k_m = F\,k_{He} + k_{foam} \qquad (11)$$

where k_{He} is the conductivity of helium and the k_{foam} is the foam conductivity. However, Eq. (11) results in an overestimation if k_{foam} is estimated to be $(1\text{-}F)k_W$. Only one experimental k_{foam} measurement was found for W-foam having 65 pore per inch (ppi) [12]. It varied between 1 W/m-K at 1000 K and 4 W/m-K at 3000 K. The present work is based on W-foam with a pore count of 10 ppi foam and a porosity of about 90%. The rule of mixture, $k_{foam} = Fk_{He} + (1\text{-}F)k_W$, would predict a thermal conductivity of 10 W/m-K, however, a more conservative foam thermal

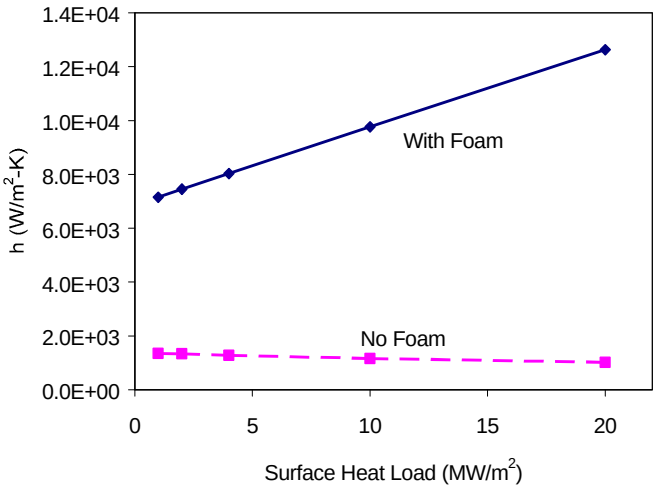

Figure 4: Effective heat transfer coefficient of a W-tube w/o W-foam as a function of normal surface heat load.

conductivity of 4.5 W/m-K based on the experimental value is assumed. Table 2 lists the parameters used to evaluate the effective *h* along the foam-covered section of the W-tube. For the FEM thermal analysis, temperature dependent helium properties were used based on an average temperature along the W-foam covered section. The heat transfer coefficient depends on the surface heat load (Eq. 10). Calculations of the *h* as a function of surface heat load are shown in Fig. 4. The section covered by W-foam is estimated to have a heat transfer coefficient, which is an order of magnitude larger than that of plain walls.

4. FEM ANALYSIS RESULTS

Figures 5 and 6 show the maximum surface temperature of the W-tube illuminated with a 10 MW/m^2 surface heat load for plain and W-foam containing tubes, respectively. The surface temperature of the plain W-tube reaches almost 4,800 K, which is a factor of three larger than the maximum temperature reached by the W-foam containing tube (1500 K). Figure 7 summarizes the results of maximum surface temperatures as a function of surface heat loads ranging from 1 MW/m^2 to 20 MW/m^2.

Table 2: Parameters used in the Convective Heat transfer and the FEM model.

W-Thermal Conductivity (RT/2000°C)	130/95
Foam Thermal Conductivity (W/m-K)	4.5
Foam Porosity (%)	90
Foam pores/inches (ppi)	10
Foam Ligament diameter (cm)	0.0508
Helium Thermal Conductivity (W/m-K) @ RT/600°C	0.149/0.229
Pr Number @ RT/600°C;	0.70/0.72
μ (10^6 kg/m-s) @ RT/600°C	20.1/31.7

The plain W-tube reaches 1500°C at about 3 MW/m^2, while the W-foam containing tube attains this maximum at a heat load of about 15 MW/m^2. For this test section the W-foam can potentially improve the heat load capability of the W-tube by almost a factor of 5.

5. DISCUSSION

The heat transfer coefficient model is based on fundamental convective heat transfer using constant mean values for temperature. Using a local heat transfer coefficient with the local mean fluid temperature instead of section-averaged values would result in a more detailed temperature distribution of the tube wall. Furthermore, applying the conservation of momentum to compute the pressure downstream as well as upstream from the foam would more closely represent the experimental fluid velocities inside the porous medium (foam) and therefore contribute to a more accurate convective heat transfer coefficient. Although, these improvements may be desirable for a more detailed analysis, they exhibit only secondary effects on the heat transfer coefficient and as such will not alter the findings appreciably.

These enhancements may affect the results for flow through short (L/D < 10) W-foam sections. For the case of longer tubes (L/D > 60), the flow becomes thermally and hydro-dynamically fully developed and the Nusselt number attains a constant value independent of the Reynold's number and therefore independent of velocity. This constant Nusselt number will actually be a minimum relative to the developing conditions, and as a result the effective heat transfer coefficients would be somewhat reduced for long tubes. Therefore, the presented results should be used with caution when applied to component design relevant studies using long plasma-facing tubes.

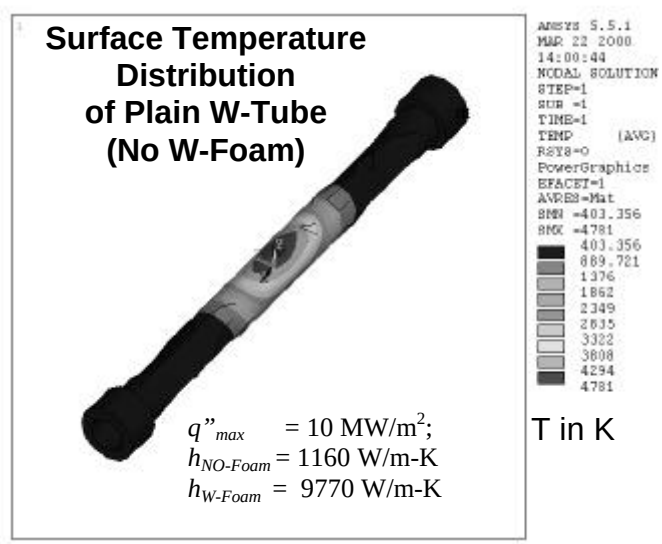

Figure 5: Surface temperature distribution of the plain W-tube at q''_{max}= 10 MW/m^2.

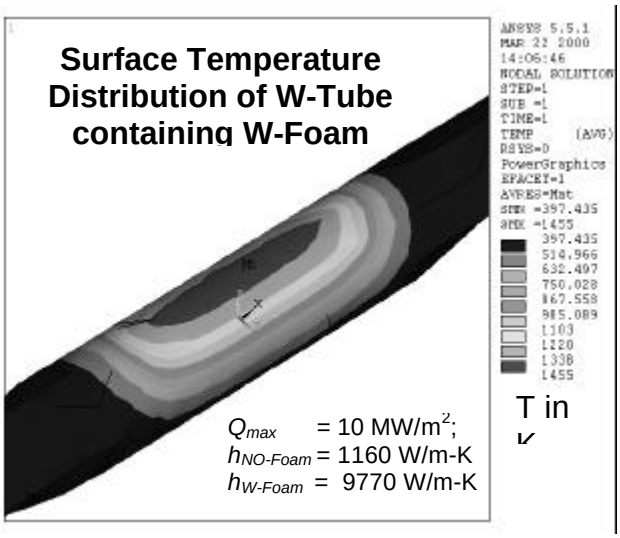

Figure 6: Surface temperature distribution of the W-tube containing W-foam at q''_{max} = 10 MW/m^2.

6. SUMMARY

Improvements in the heat removal capabilities are critical for many industries. The use of a highly porous (F ~ 90%) W-foam inside a W-tube has been investigated as a means of increasing the surface heat load capability. The heat load capability of a test section consisting of a 19 cm long W-tube with W-foam inside has been modeled.

A convective heat transfer model was used to evaluate the effective heat transfer coefficient along the W-foam covered section. The enhanced heat transfer depends on the effective thermal conductivity of the W-foam ($k_{W\text{-}Foam}$). Measured $k_{W\text{-}Foam}$ values, which are lower (4 W/m-K at 3000 K) compared with values derived using the rule of mixtures (10 W/m-K) was used. Because the foam-containing test section is short, ~10 cm, entrance effects were considered and the FEM thermal analysis was based on a constant average mean temperatures of the coolant inside the tube.

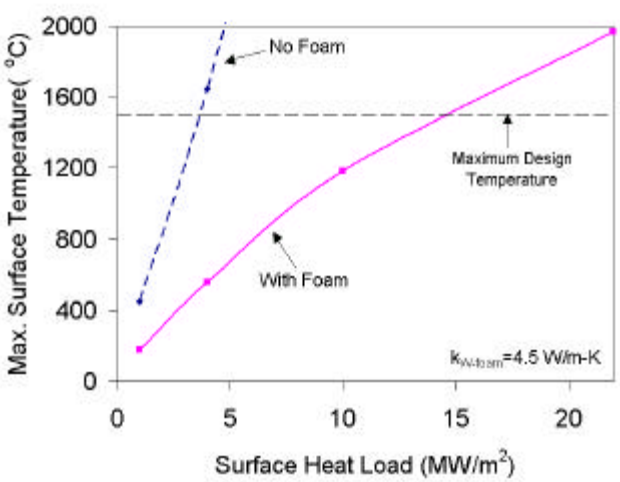

Figure 7: Maximum surface temperature of the W-tube with and without W-foam, based on the convective heat transfer model and FEM analysis.

Using the heat transfer coefficient of a porous W-foam, a FEM analysis of a 3-D solid model was conducted. The analysis shows, that inclusion of a high porosity foam can improve the heat load capability of tungsten tubes by as much as a factor of 5 at an operating temperature of 1500°C. The model could be improved, by estimating the down stream pressure and by using local temperatures throughout the tube. However, these improvements are considered to have only secondary effects on the overall thermal performance of the test section.

ACKNOWLEDGMENT:
This work was supported by Ultramet with a DOE SBIR-Phase-I funded program. Grant #: DE-FG03-99ER82913.

7. REFERENCES:

[1]. M. A. Abdou, et al., APEX Interim Report, Volume II, University of California Los Angeles, UCLA report, UCLA-ENG-99-206, UCLA-FNT-107, November 1999
[2]. Ibid, page 13-14.
[3]. Ibid page 13-26.
[4]. Youchison, Dennis L.; Izenson, Michael; Baxi, Chandu B.; Rosenfeld, John H, "High-heat-flux testing of helium-cooled heat exchangers for fusion applications," Fusion Technology 29, Issue 4 (1996) 559-570.
[5]. Rosenfeld, John H.; Lindemuth, James E.; North, Mark T.; Watson, Robert D.; Youchison, Dennis L.; Goulding, Richard H., "Evaluation of porous media heat exchangers for fusion applications," Fusion Technology 29, Issue 4 (1996) 449-458.
[6]. Baxi C. B., J Smith J. and Youchison D., "Design, fabrication and testing of a helium cooled module," Fusion Engineering and Design 28, 2 (1995) 22-26.
[7]. Ebara S, Toda S, Hashizume H, "Application of porous matrix to high heat load removal system," Heat Mass Transfer 36: (4) (2000) 273-276.
[8]. Ebara S., Hashizume H., Toda S., "High Heat Removal by Evaporated Fluid in Porous Media," The 9th APEX Meeting: APEX/HDP Workshop, Feb. 21-23, 2000, Tokyo, Japan; www.fusion.ucla.edu/apex.
[9]. "Introduction to Heat Transfer," F. P. Inropera, John Wiley, 1990
[10]. "Convection in Porous Media," D. A. Nield and A. Bejan, Springer Verlag, New York, 1991.
[11]. "Convective Heat and Mass Transfer," W. M. Kays, and M.E. Crawford, McGraw Hill, New York, 1993.
[12]. J. D. Malloy, "Thermal and Structural Analysis of Tungsten Foam/PCM Rocket Nozzles," Novatech Report, NT-TDR-98-105, August 1998.