A High Temperature FLiBe Loops Developed in Tohoku University in Collaboration with NIFS

S. Toda
H. Hashizume

Tohoku University

1. Applicability of FLiBe as coolant

Property of FLiBe

- Thermal characteristics :equivalent to water.
- Low electrical conductivity(low MHD resistance).
- Low reactivity with air and water.
- High melting point.
- High viscosity $\Longrightarrow$ Pressure drop by viscosity must be considered in spite of low MHD resistance.

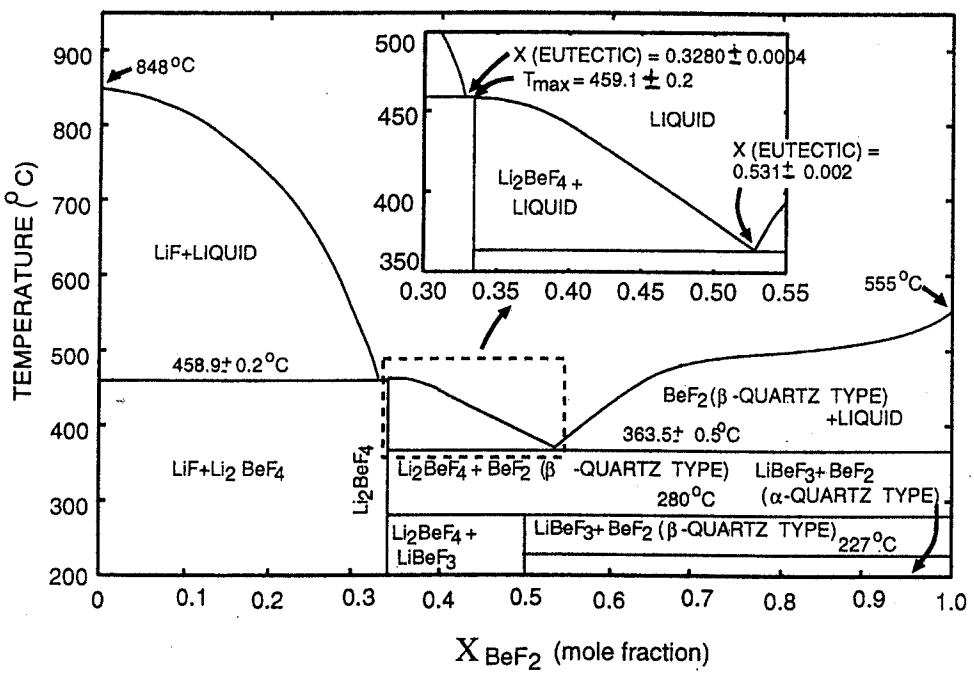

Figure 1: Revised phase diagram of the system LiF-BeF_2(by K.A.Romberger, J.Braunstein, and R.E.Thoma, 1972)

Comparison between FLiBe and Li

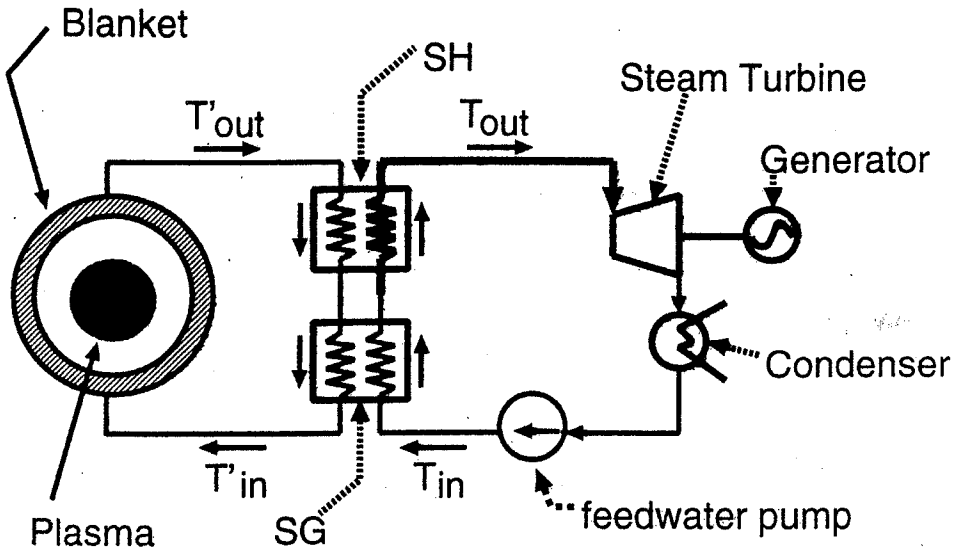

Figure 2: Concept of heat exchange

◇*Assumptions*◇

↪Fusion energy:3000MW$_{th}$

↪3000MW$_{th}$ is exchanged at HX. And · · ·

About 80 % of total fusion energy is received in blanket.

Minimum temperature : 450℃ (melting point and viscosity)

Maximum temperature : 650℃ (corrosion on structure materials)

↪ FLiBe:2.5(m^3/s) ; Li:2.9(m^3/s)

⇒Calculation of pressure drop by viscosity and MHD(steady flow in a pipe).

2.Calculation of pressure drop

Consider fully developed steady-state flow:

Pressure drop by viscosity

Using Darcy-Weisbach Equation:

$$\frac{dP}{dl} = \lambda \frac{1}{D} \frac{\rho U_0^2}{2} \qquad (Pa/m) \qquad (1)$$

where, pipe friction coefficient $\lambda = 64/Re$(laminar flow)

$\lambda = 0.184/Re^{0.2}$(turbulent flow)

Pressure drop by MHD

$$\frac{dP}{dl} = \frac{C}{1+C} \sigma_f U_0 B_0^2 sin^2 \alpha \qquad (Pa/m) \qquad (2)$$

where,α:angle between fluid flow and line of B.

$C \simeq \dfrac{\sigma_w (b-a)}{\sigma_f a}$:wall-to-fluid conductance ratio.

$\Downarrow$

Pressure drop by MHD varies with α
and insulating rate of pipe.

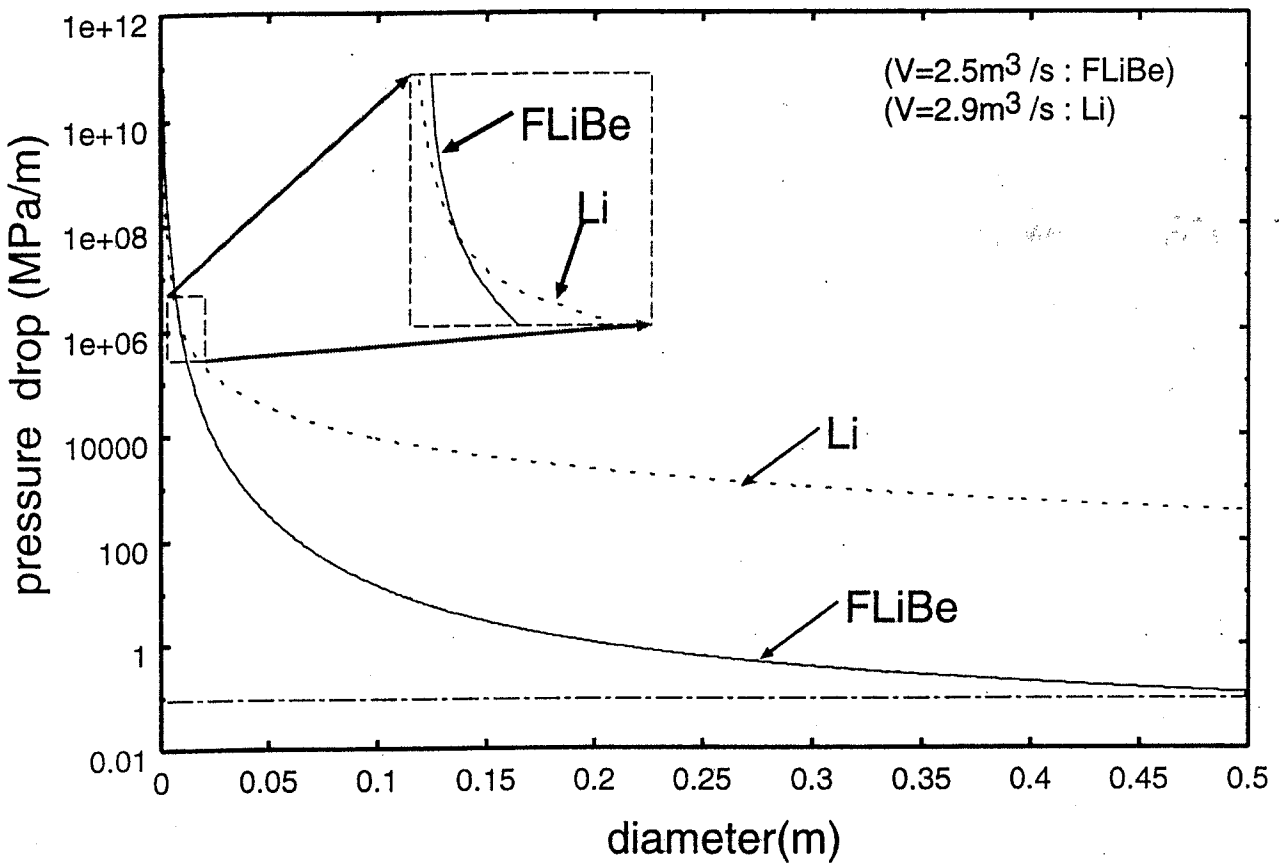

Figure 3: Pressure drop of FLiBe and Li, by viscosity and MHD (B*=12Tesla ; α^{**}=90°)

* Magnetic Field

**angle between Fluid Flow and Magnetic Field

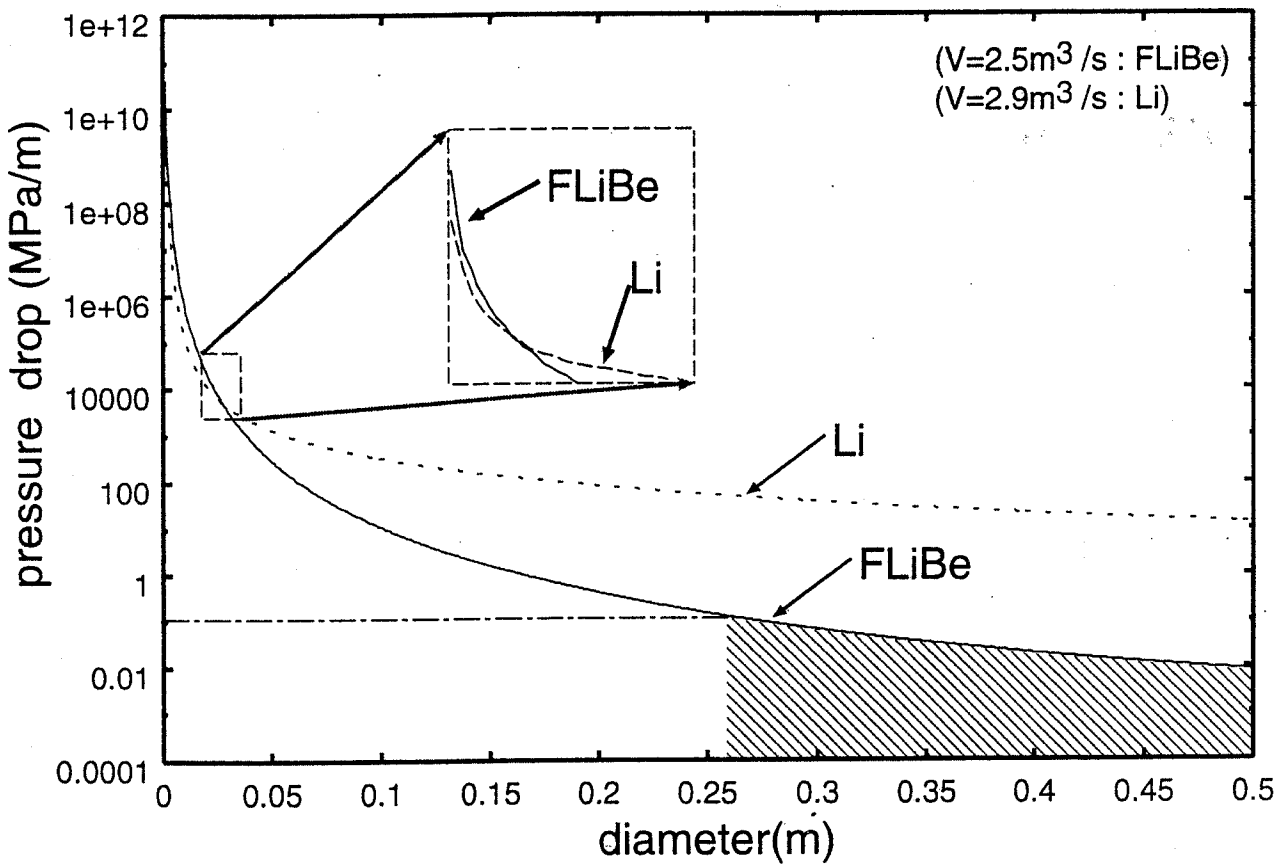

Figure 4: Pressure drop of FLiBe and Li, by viscosity and MHD (B=12Tesla ; α=10°)

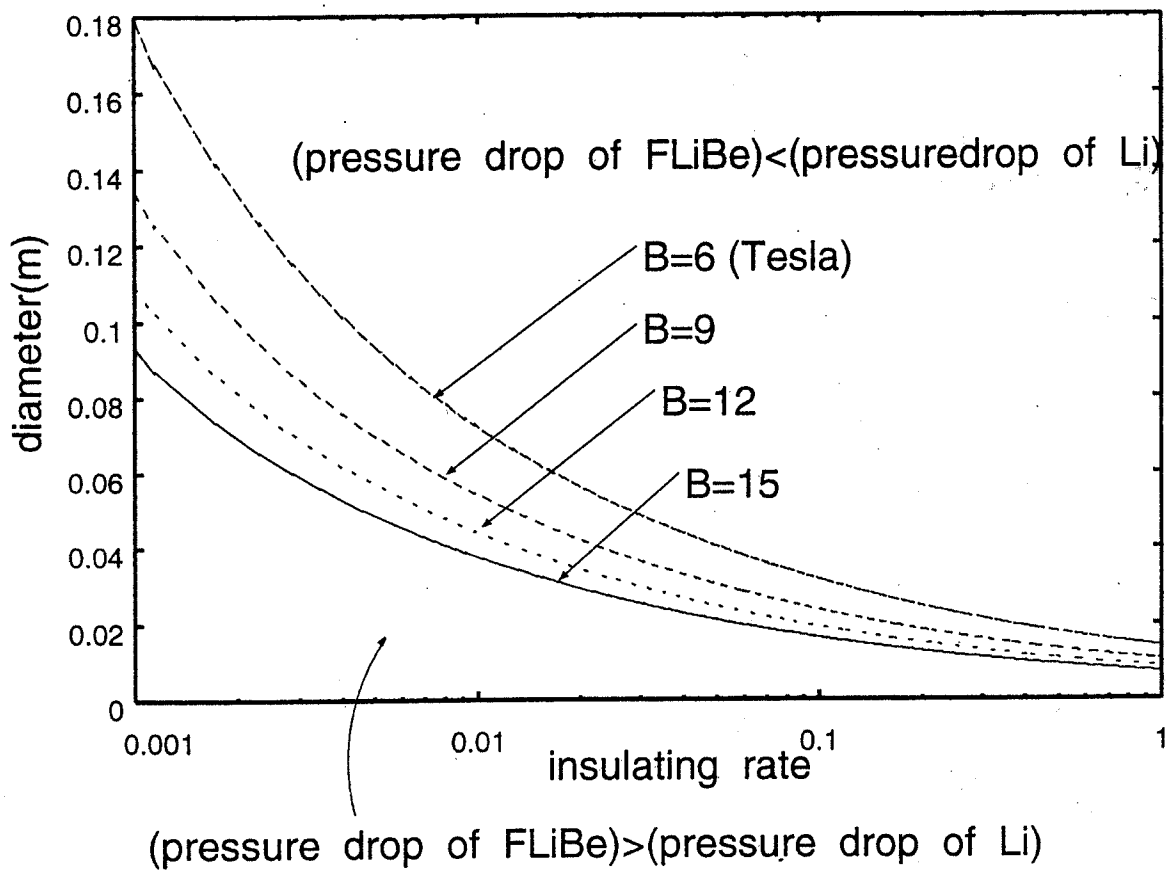

Figure 5: Equivalent pipe diameter from view point of pressure drop by viscosity and MHD (α=90°)

3. FLiBe loop

3. 1 Purpose

To develop the FLiBe blanket system, we need

1) some experience on FLiBe loop for both thermohydraulics and safe treatment of FLiBe

2) new technique of heat removal in divertor

3) date on compatibility with material and other chemical characteristics.

3.2 Research Plan

1997 FY

- ●specification of FLiBe loop
  (temp., flow rate, material)
- ●designing the loop system

1998 FY

- ●final designing of the loop
  (Apr.-Aug.)
- ○fabrication(Aug.-Feb.)
  → almost finished
- ○settlement(Feb.)
  → delayed until this March

Cleaning the experimental facility
Regulation about Be

○flow experiment(May or June)

○fundamental study on surface heat removal

○fabrication of test section for heat removal (pre experiment)

1999 FY

○development of high heat removal system

○planing chemical experiments

○designing & fabrication of the test section

2000 FY

○experiments on heat removal, control & chemical characteristics

3.3 FLiBe Loop

1)Configurations

Location : Tohoku University, Japan

Size : 2m(L) x 2.5m(D) x 3m(H)

Loop type : closed loop with forced air cooling

Test seciton : removable, 70 cm length

Flow rate : 10 l/min

temp. range: 773K - 873 K

Heat trasnfer : 80 kW

Max. press. : 0.7 MPa

Allowable press. drop at test section : 0.4MPa

Str. Material : SUS316

2) Schematic view of the loop

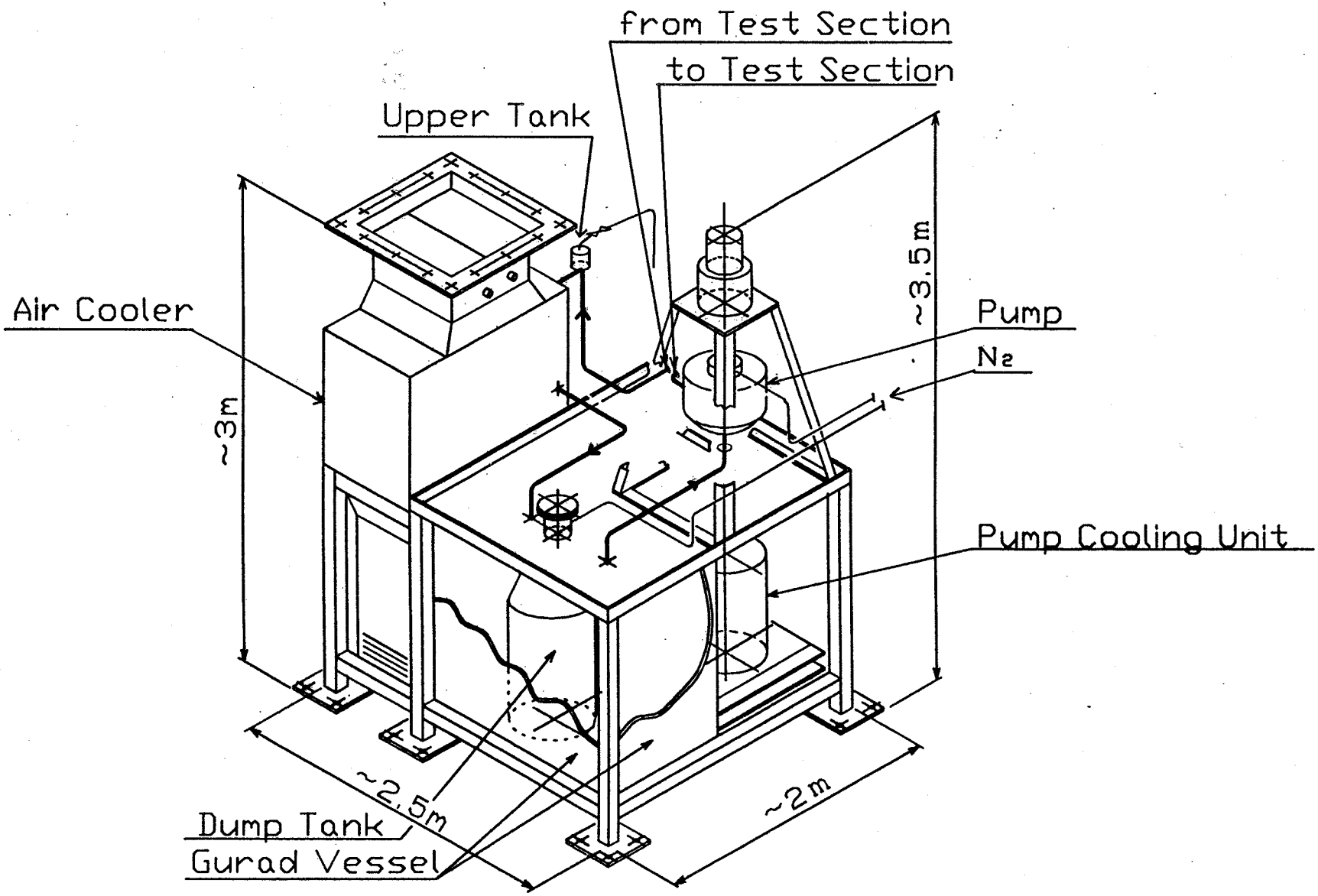

Molten Salt(FLIBE) Circulating Equipment

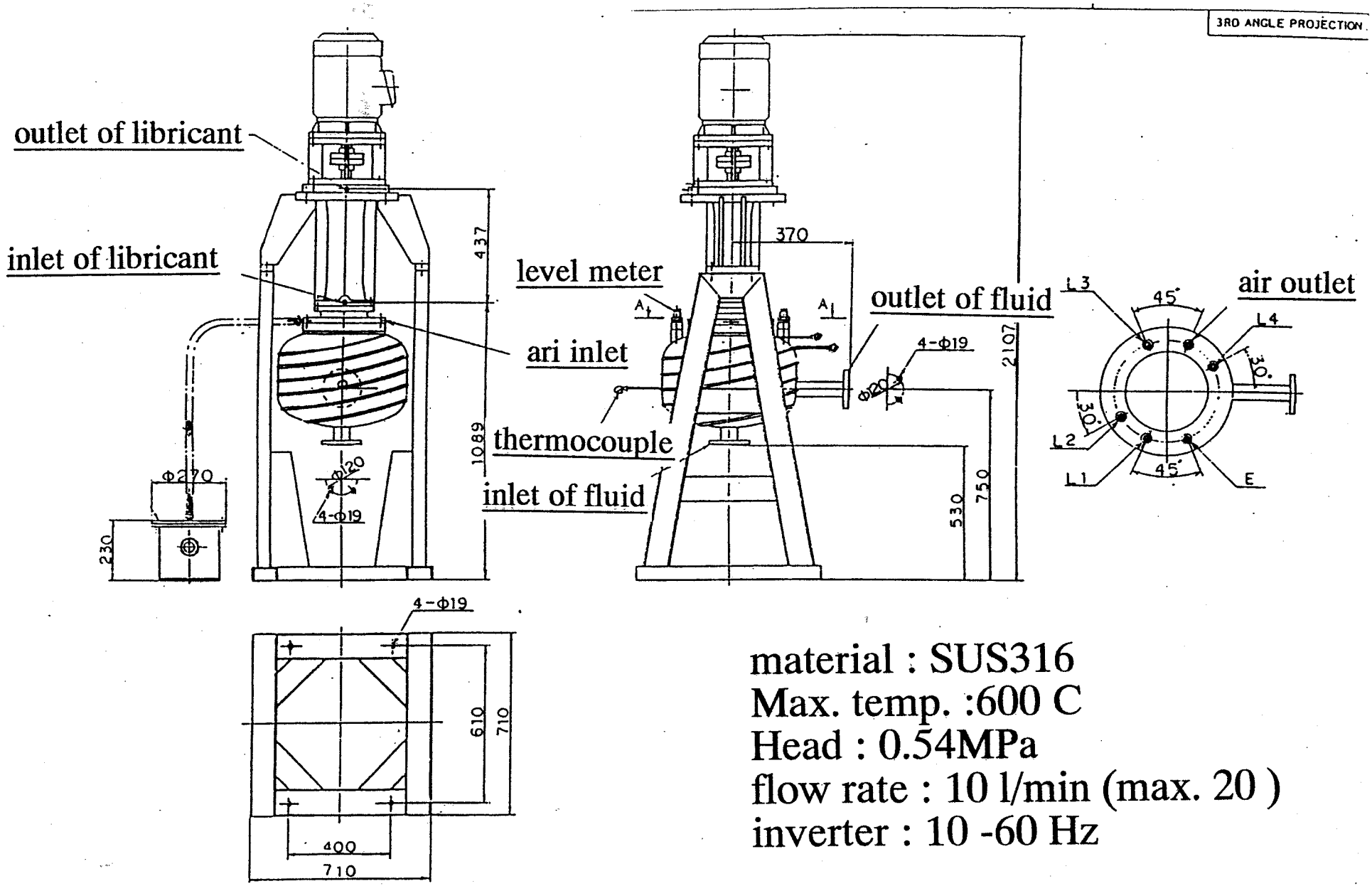

material : SUS316
Max. temp. :600 C
Head : 0.54MPa
flow rate : 10 l/min (max. 20)
inverter : 10 -60 Hz

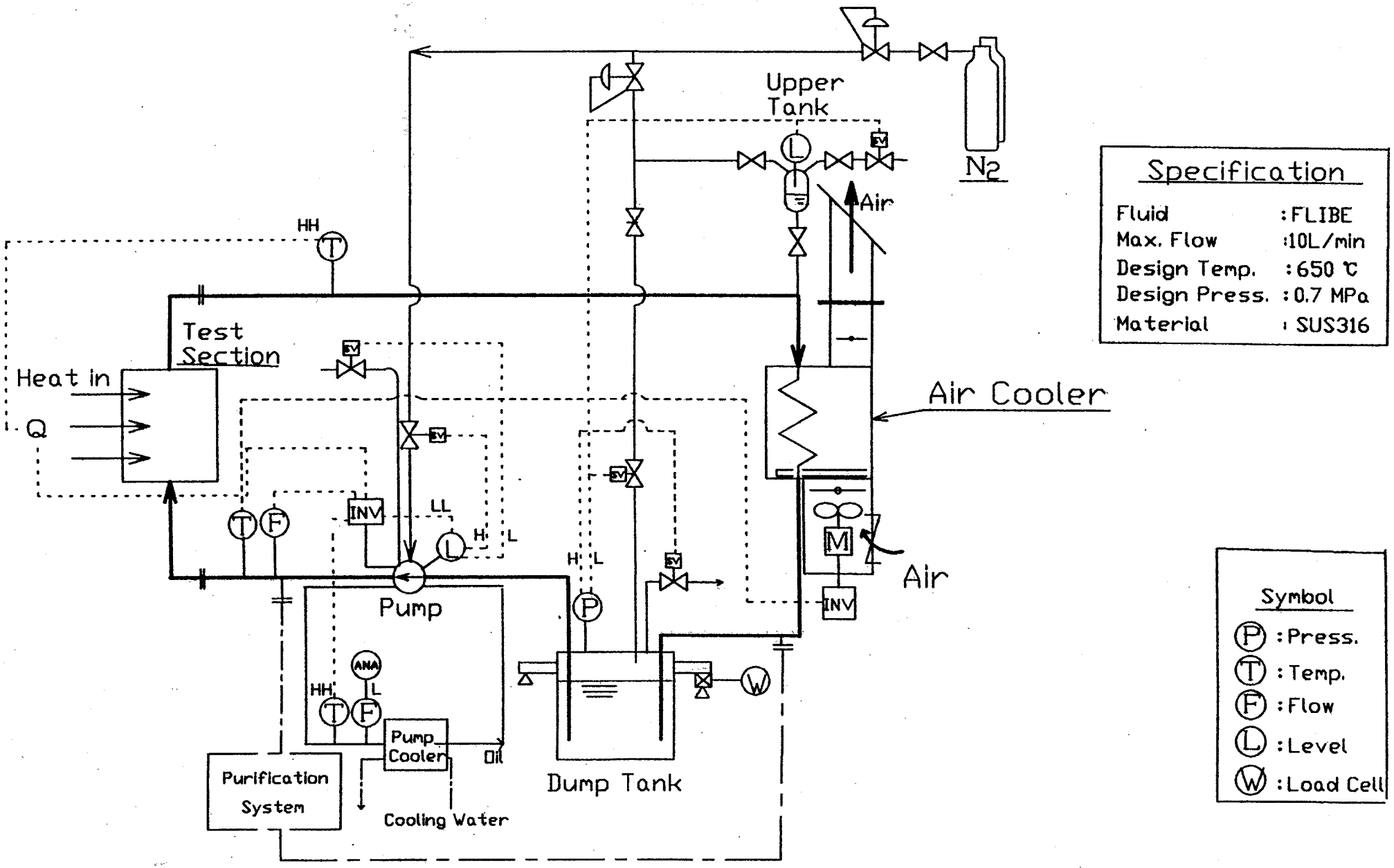

Molten Salt(FLIBE) Circulating System

4. Improvement of thermal characteristics

High Pr Number

↓

Thin thermal boundary layer

Enhancement for heat transfer

○Swirl tube (Feb.17)

○Porous media (Feb.16)

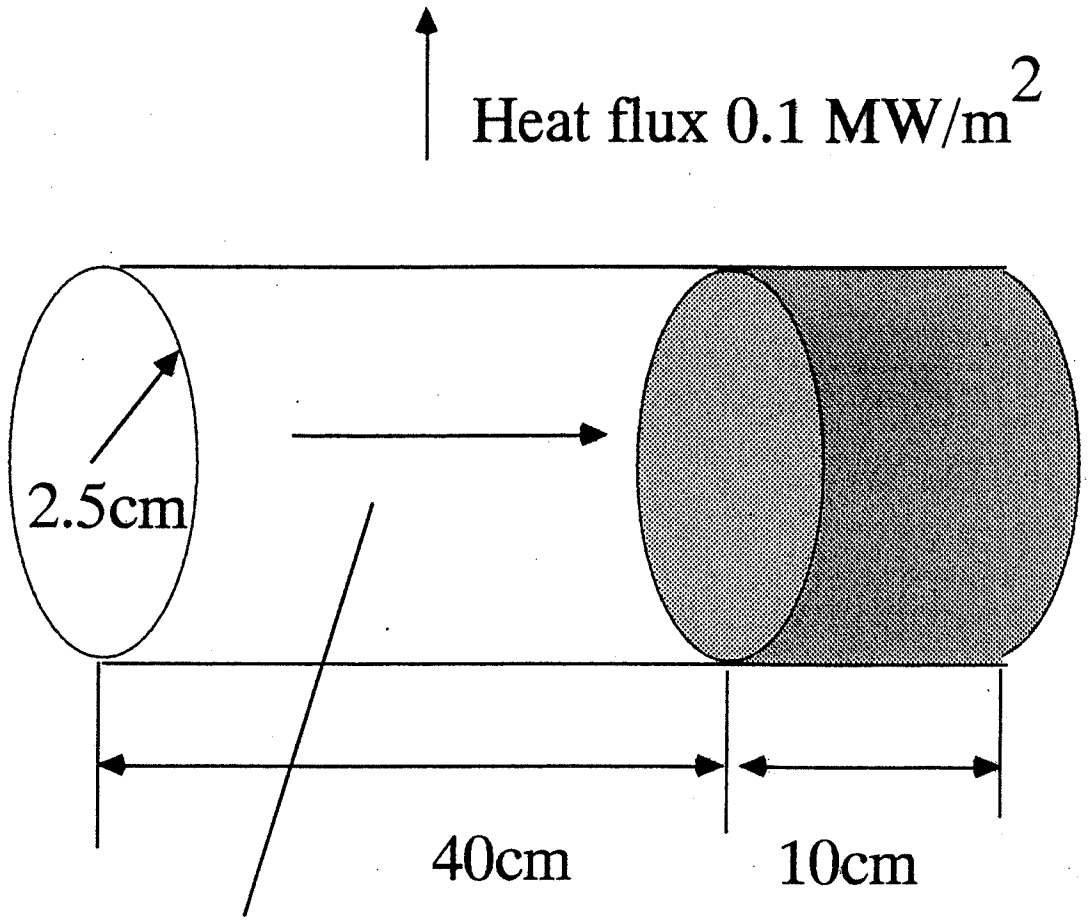

Fully developed flow

porosity 0.4

A model used in numerical analysis

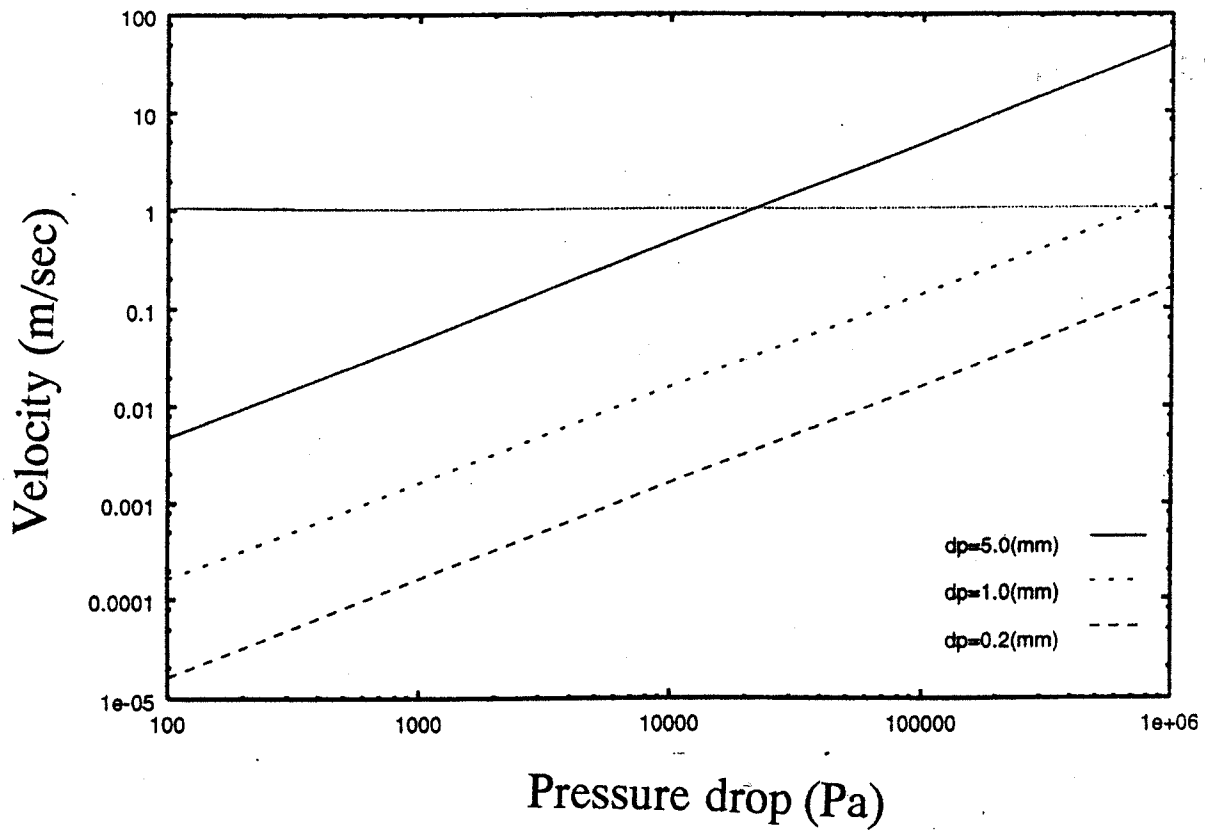
100
10
1
0.1
0.01
0.001
0.0001
1e-05
100
1000
10000
100000
1e+06
Velocity (m/sec)
Pressure drop (Pa)
dp=5.0(mm)
dp=1.0(mm)
dp=0.2(mm)

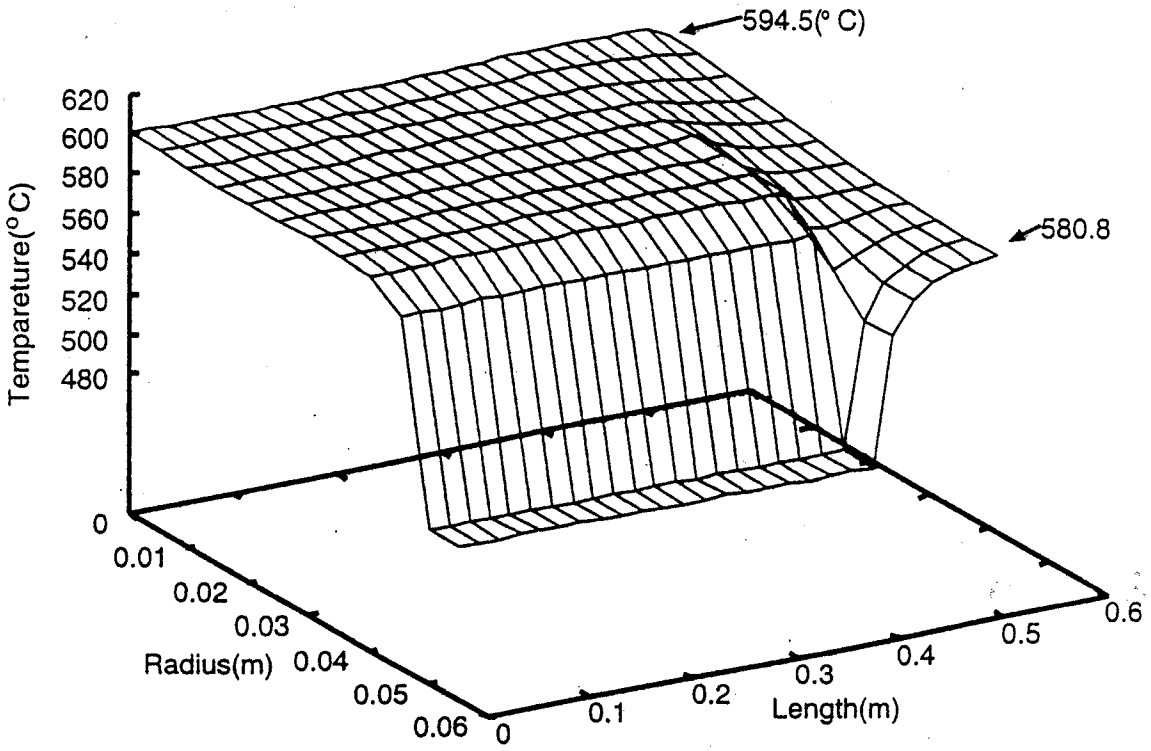

Temperature distribution (1 m/sec, d=0.2mm)

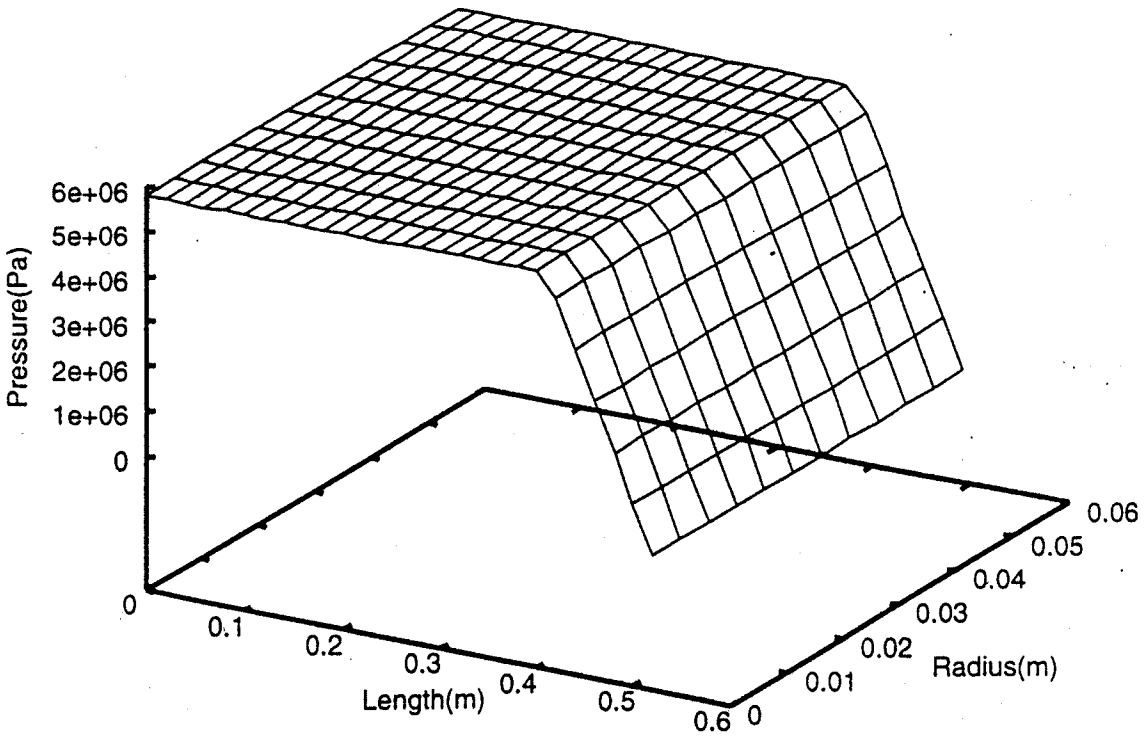

Pressure distribution (1 m/sec, d=0.2mm)