Axi-symmetric Positional Stability of Plasma with Liquid First Wall Concept

Tetsuya Uchimoto

APEX

Sandia National Laboratory

July 29, 1998

Objectives

Liquid first wall concept gives the constraint to the curvature of structures surrounding the plasma.

The structures located further from the plasma may not stabilize plasma position.

↓

Allowable curvature of radius for plasma stabilization must be examined for the design of liquid blanket / first wall system.

Present study investigates the plasma stability with the current design of liquid blanket / first wall system.

Plasma Model

Plasma's equation of motion (vertical direction):

$$m\frac{\partial^2 Z}{\partial t^2} = 2pRI_P \frac{\partial B_R^{EQ}}{\partial Z} Z + \sum_i I_P \frac{\partial M_{Pi}}{\partial Z} I_i \qquad (1)$$

M_{Pi} : mutual inductance between plasma and i – th coil

Circuit equation for i-th coil:

$$L_i \frac{dI_i}{dt} + r_i I_i + = 2pRI_P \frac{\partial M_{Pi}}{\partial Z}\frac{\partial Z}{\partial t} \qquad (2)$$

n-index and ns - index are defined as :

$$n \equiv -\frac{R}{B_R^{EQ}}\frac{\partial B_R^{EQ}}{\partial Z}$$

$$n_s \equiv -\frac{R}{B_Z^{EQ}}\frac{dB_R^s(w)}{dZ} \qquad (3)$$

Plasma Model

With n and n_s index, eq. (1) can be expressed as

$$\frac{m}{2pI_P B_Z^{EQ}} \frac{\partial^2 Z}{\partial t^2} = -(n + n_s) Z \tag{4}$$

N_s is expressed as follows after eigen mode analysis and the Laplace transform of eq. (2):

$$n_{sj} = -\frac{I_P}{2pB_Z^{EQ} t_{sj}} \left(\frac{\partial M_{Pi}}{\partial Z} X_{ij} \right) \left(X_{ij}^{\ T} \frac{\partial M_{Pi}}{\partial Z} \right) \frac{iw\, t_{sj}}{1 + iw\, t_{sj}} \tag{5}$$

$$n_s = \sum_j n_{sj}$$

where t_{sj} : eigen value

$X = (\vec{x}_1, \vec{x}_2, \cdots, \vec{x}_n)$, $\vec{x}_j$: eigen vector.

$\frac{\partial M_{Pi}}{\partial Z}$ is estimated using MHD equilibrium code.

ARIES-RS k=1.7 B0=7.98(T) BETA=5.0%
RP=5.52 AP=1.38 ZP=0.0 IP=11.32(MA)

TIME = 1.000E 00SEC

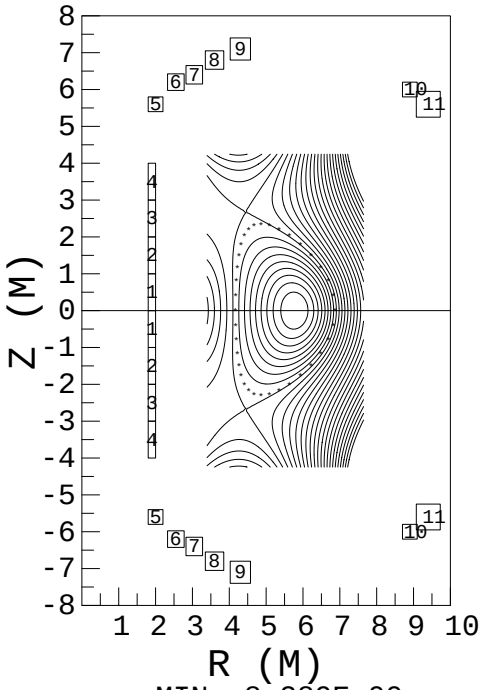

MIN=-8.289E 00
MAX= 1.971E 01
DEL= 1.000E 00

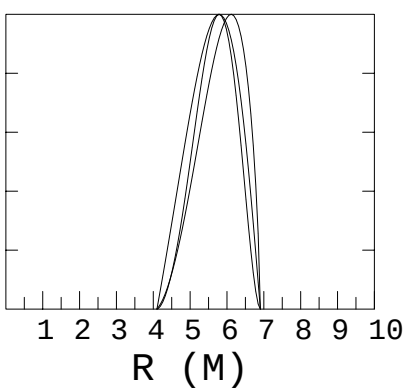

—o— MAG.FLUX MAX= 2.058E 01
SURFACE= 1.171E 01
—x— CUR.DENST. MAX= 3.003E 06 A/M**2
—H— PRESSURE MAX= 4.697E 06 N/M**2

***** PLASMAPARAMETERS **********

IP-CURRENT	(A)	1.132E 07
VLOOP-SURFACE	(V)	-7.358E 01
SELF INDUCTANCE	(H)	1.275E-05
SMALL LI(1)		1.142E 00
SMALL LI(2)		8.020E-01
SMALL LI(3)		8.429E-01
R-AVERAGE	(M)	5.502E 00
R-INNER	(M)	4.099E 00
R-OUTER	(M)	6.906E 00
R-MAGNETIC AXIS	(M)	5.783E 00
R-CURRENT MAX.	(M)	6.108E 00
A-HALF WIDTH	(M)	1.403E 00
A-AVERAGE	(M)	1.844E 00
%-SEPARATRIX		1.000E 00
OUTER DISTANCE	(M)	7.493E-10
INNER DISTANCE	(M)	1.640E-09
ELLIPTICITY		1.727E 00
CROSS AREA	(M**2)	1.068E 01
VOLUME	(M**3)	3.542E 02
TOROLDAL BETA	(MHD)	4.970E-02
POLOIDAL BETA	(MHD)	7.143E 00
POLOIDAL BETA	(AREA)	2.594E 00
POLOIDAL BETA	(VOLUME)	2.747E 00
MHDQ-VALUE	(SURFACE)	1.424E 01
MHDQ-VALUE	(95% FLUX)	3.722E 00
BV-SHAFRANOV	(T)	-9.568E-01
BV-CALCULATED	(T)	-8.270E-01
AVERAGE FLUX	(WB)	1.066E 02
SUPPLIED FLUX	(WB)	-3.770E 01
ABS TOTAL AMP	(AT)	2.132E 08
STORED ENERGY	(J)	2.840E 10
AMP-TURN METER	(AT-M)	5.653E 09
LIMITER R	(M)	4.447E 00
Z	(M)	-2.683E 00
PSI	(WB)	1.171E 01
RP (95%)	(M)	5.522E 00
AP (95%)	(M)	1.351E 00
ZP (95%)	(M)	-1.666E-09
ELON-UPPER	(95%)	1.633E 00
ELON-LOWER	(95%)	1.633E 00
TRIANG-UPPER	(95%)	5.042E-01
TRIANG-LOWER	(95%)	5.042E-01

Results of ARIES Plasma equilibrium analysis

Conclusion

- Liquid lithium wall has the possibility to stabilized the plasma. For more precise estimation, we need to couple MHD flow code and plasma MHD code.

- Flibe has no capability of plasma stabilization. However, even if we use Flibe as working fluid, design of plasma position control permits the maximum curvature of 5 m which can be accommodated to the design of liquid wall.

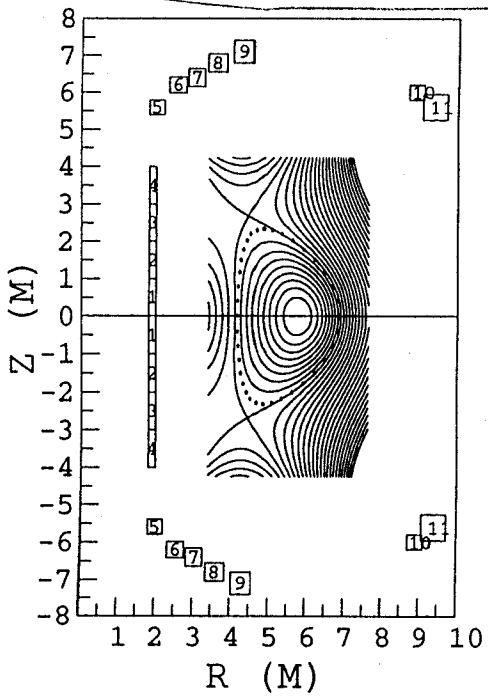

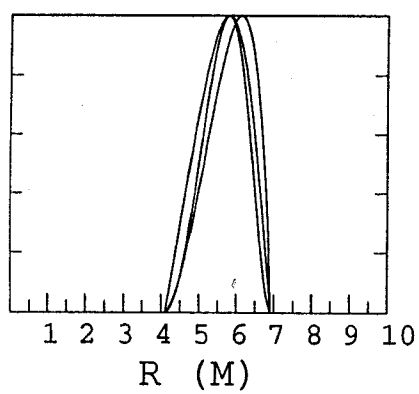

MAG.FLUX MAX= 2.058E 01

SURFACE= 1.171E 01

CUR.DENST. MAX= 3.003E 06 A/M**2

PRESSUR MAX= 4.697E 06 N/M**2

***** PLASMAPARAMETERS **********

IP-CURRENT	(A)	1.132E 07
VLOOP-SURFACE	(V)	-7.358E 01
SELF INDUCTANCE	(H)	1.275E-05
SMALL LI(1)		1.142E 00
SMALL LI(2)		8.020E-01
SMALL LI(3)		8.429E-01
R-AVERAGE	(M)	5.502E 00
R-INNER	(M)	4.099E 00
R-OUTER	(M)	6.906E 00
R-MAGNETIC AXIS	(M)	5.783E 00
R-CURRENT MAX.	(M)	6.108E 00
A-HALF WIDTH	(M)	1.403E 00
A-AVERAGE	(M)	1.844E 00
%-SEPARATRIX		1.000E 00
OUTER DISTANCE	(M)	7.493E-10
INNER DISTANCE	(M)	1.640E-09
ELLIPTICITY		1.727E 00
CROSS AREA	(M**2)	1.068E 01
VOLUME	(M**3)	3.542E 02
TOROLDAL BETA	(MHD)	4.970E-02
POLOIDAL BETA	(MHD)	7.143E 00
POLOIDAL BETA	(AREA)	2.594E 00
POLOIDAL BETA	(VOLUME)	2.747E 00
MHDQ-VALUE	(SURFACE)	1.424E 01
MHDQ-VALUE	(95% FLUX)	3.722E 00
BV-SHAFRANOV	(T)	-9.568E-01
BV-CALCULATED	(T)	-8.270E-01
AVERAGE FLUX	(WB)	1.066E 02
SUPPLIED FLUX	(WB)	-3.770E 01
ABS TOTAL AMP	(AT)	2.132E 08
STORED ENERGY	(J)	2.840E 10
AMP-TURN METER	(AT-M)	5.653E 09
LIMITER R	(M)	4.447E 00
Z	(M)	-2.683E 00
PSI	(WB)	1.171E 01
RP (95%)	(M)	5.522E 00
AP (95%)	(M)	1.351E 00
ZP (95%)	(M)	-1.666E-09
ELON-UPPER	(95%)	1.633E 00
ELON-LOWER	(95%)	1.633E 00
TRIANG-UPPER	(95%)	5.042E-01
TRIANG-LOWER	(95%)	5.042E-01

Results of ARIES plasma equilibrium analysis

Configuration of structures

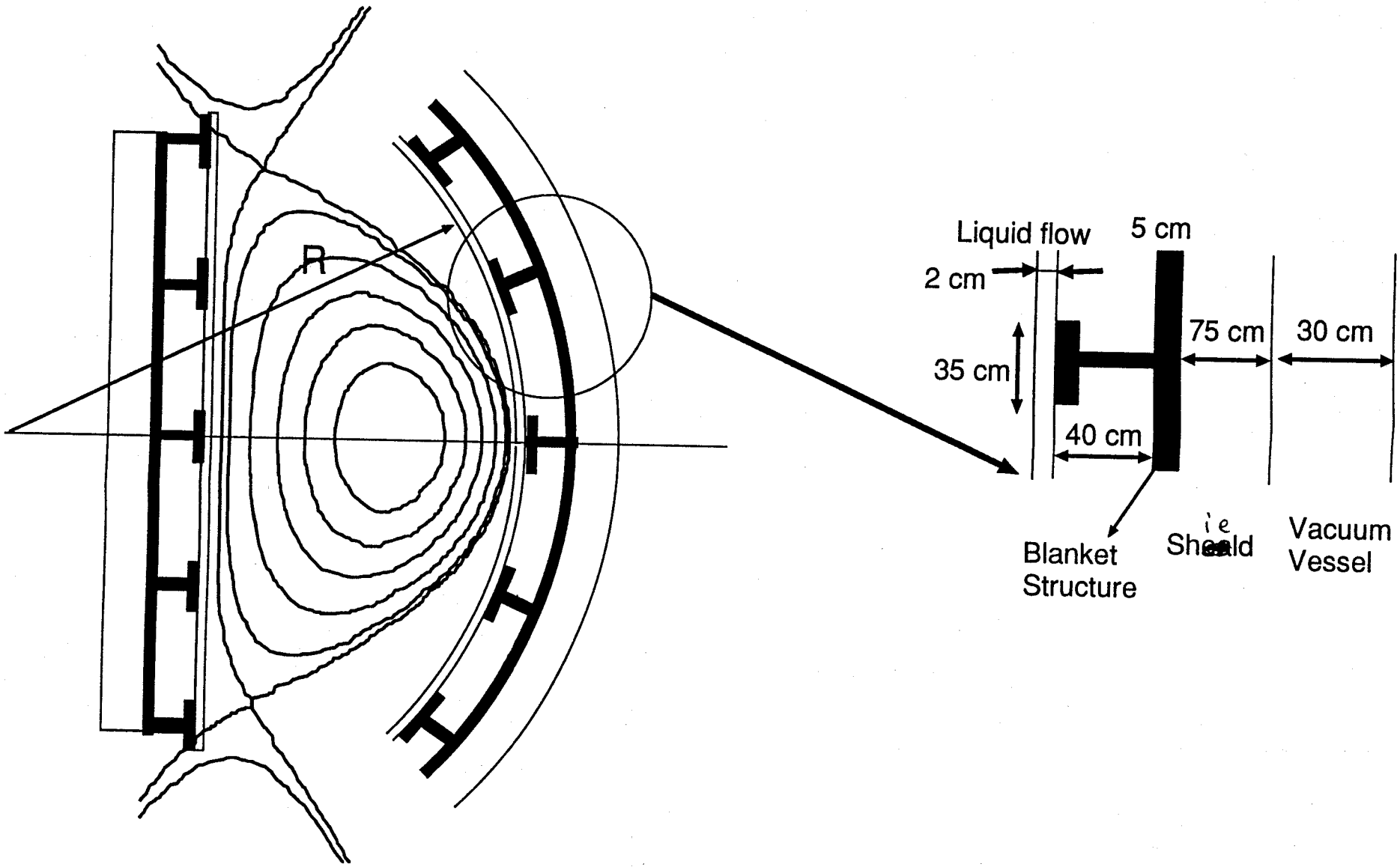

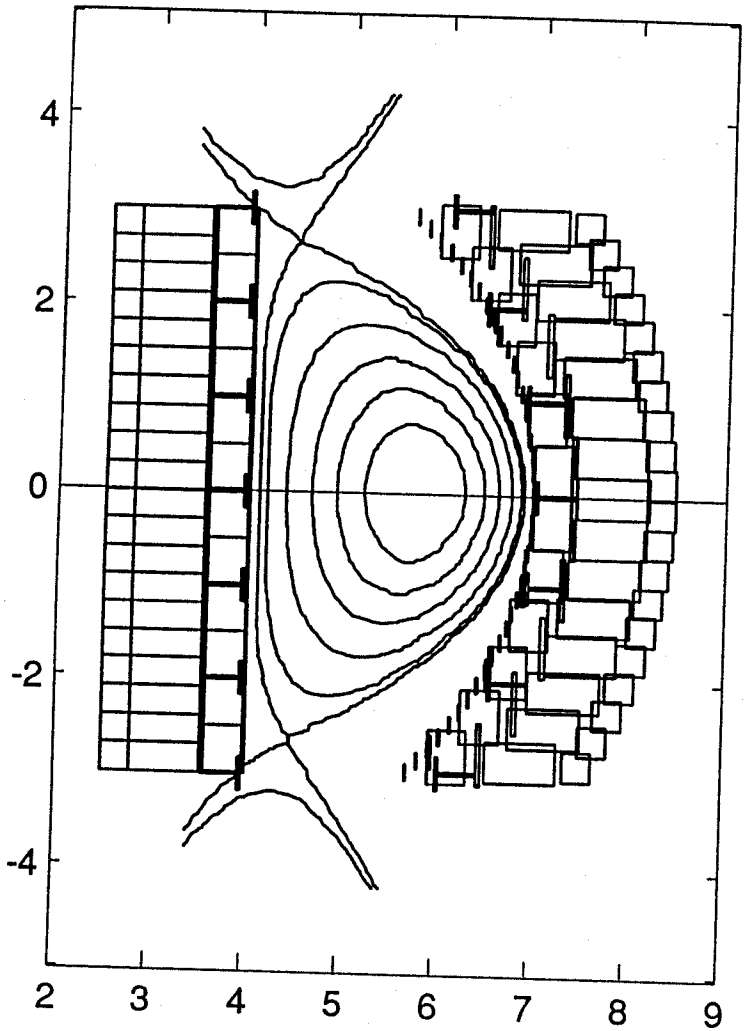

Reduced model of structures
(260 of axi-symmetric equivalent coils).

Material

Liquid wall: Li ($r = 3.0\times10^{-7}\,\Omega m$)
Flibe ($r = 1.0\times10^{-2}\,\Omega m$)

Blanket structure: W and SS

Shield: SS (60%) and Flibe (40%)

~~Shield~~: SS (70%) and Water(30%)
V, V,

Liquid walls are assumed solid conductors of the same resistivity.

Stabilization effect of structure (R=4.5m)

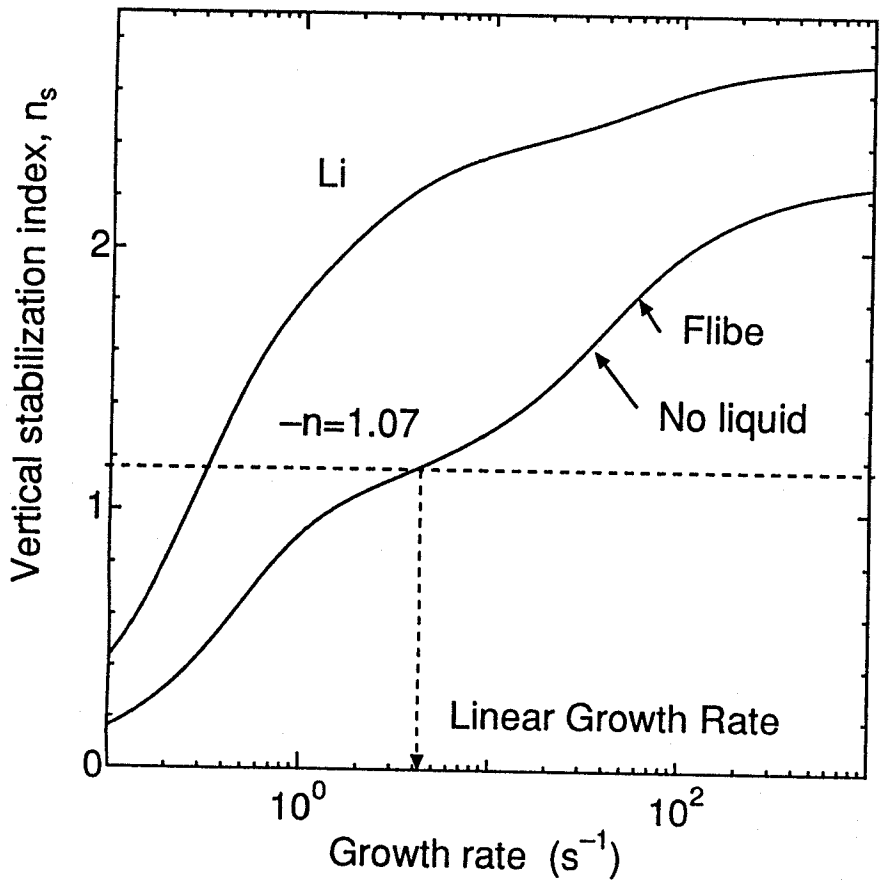

Frequency characteristics of the vertical stabilization effect.

The linear growth rate, γ_{LG} and the stability margin, M_S are defined as:

$$n + n_s(\gamma_{LG}) = 0$$

$$M_S \equiv \frac{n_s(\infty) + n}{-n}$$

Conventionally,

$$M_S > 1$$

is required.

Allowable Curvature of Liquid Wall

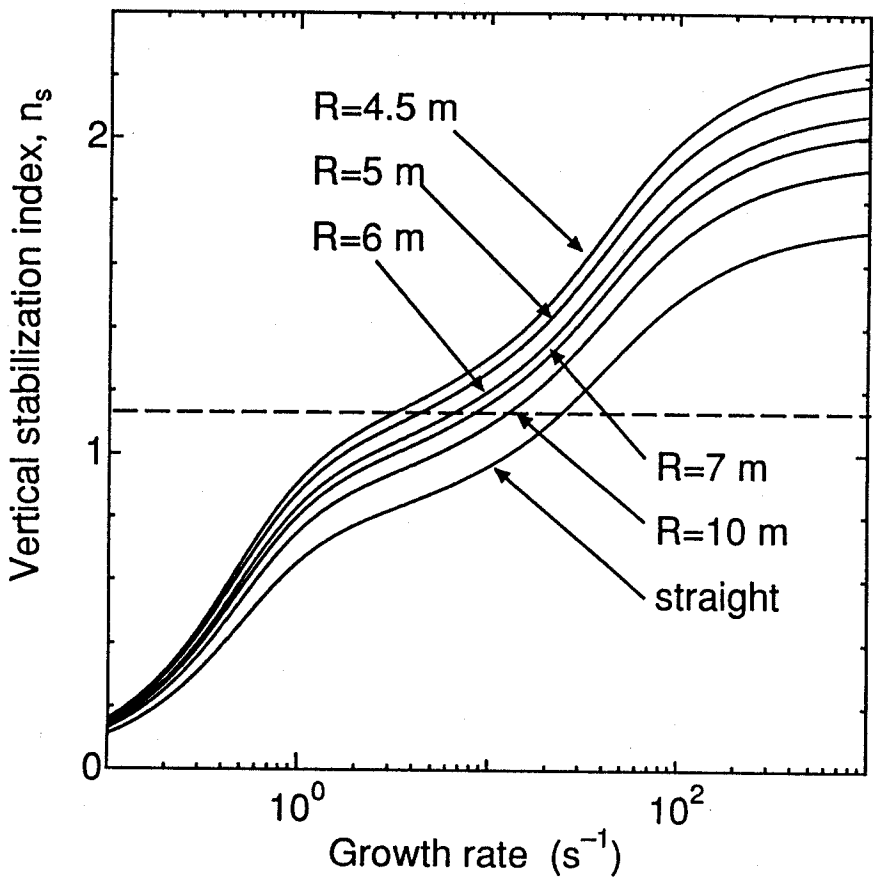

Frequency characteristics of the vertical stabilization effect.

Curvature radius, R(m)	Stability margin
4.5	1.07
5	1.03
6	0.93
10	0.77
Str~~ucture~~ raight	0.59